passive waiting active priority fired target changed

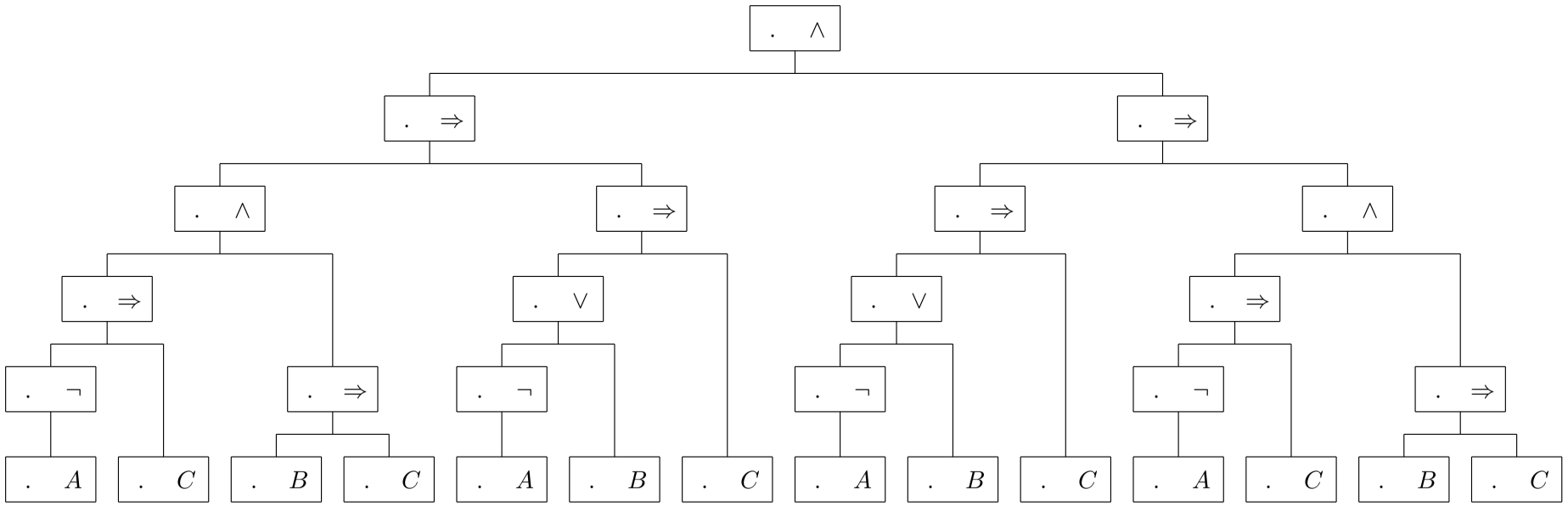

$(((\neg A \Rightarrow C) \wedge (B \Rightarrow C)) \Rightarrow ((\neg A \vee B) \Rightarrow C)) \wedge (((\neg A \vee B) \Rightarrow C) \Rightarrow ((\neg A \Rightarrow C) \wedge (B \Rightarrow C)))$

passive waiting active priority fired target changed

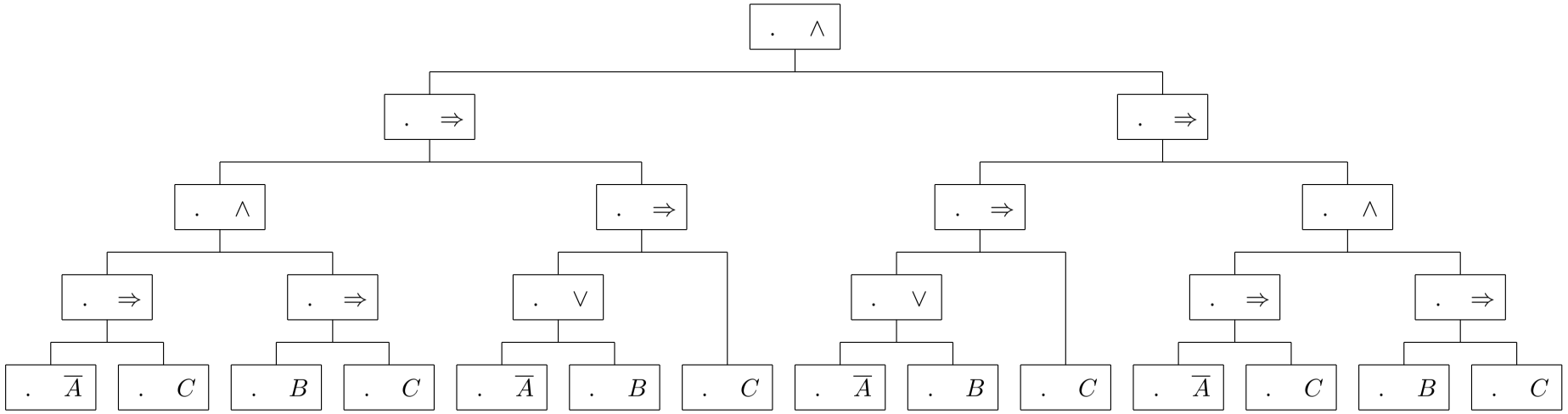

$(((\overline{A} \Rightarrow C) \wedge (B \Rightarrow C)) \Rightarrow ((\overline{A} \vee B) \Rightarrow C)) \wedge (((\overline{A} \vee B) \Rightarrow C) \Rightarrow ((\overline{A} \Rightarrow C) \wedge (B \Rightarrow C)))$

passive waiting active priority fired target changed

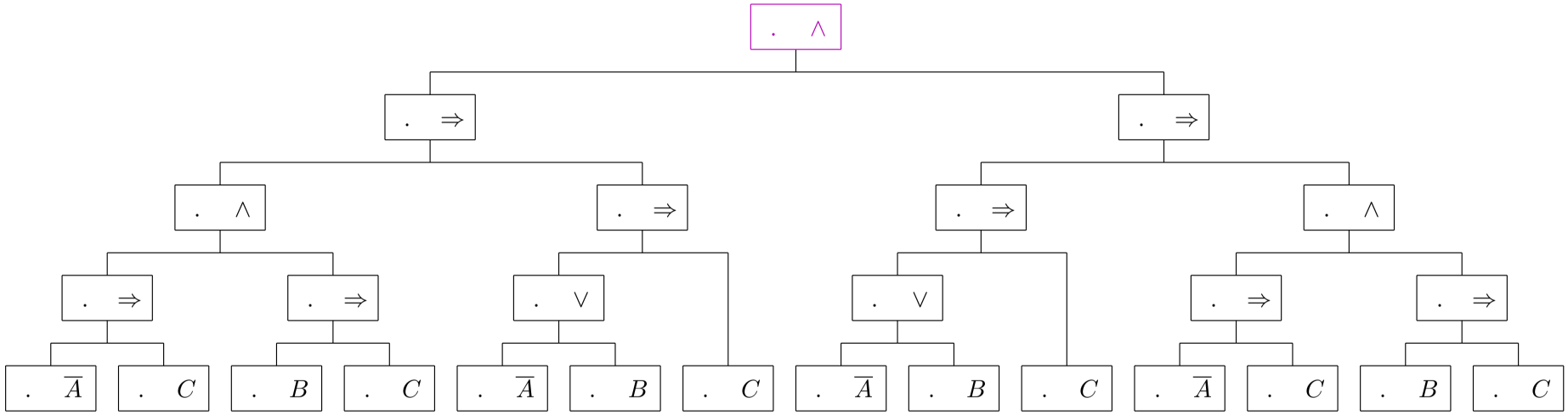

$(((\overline{A}\Rightarrow C)\wedge(B\Rightarrow C))\Rightarrow((\overline{A}\vee B)\Rightarrow C))\wedge(((\overline{A}\vee B)\Rightarrow C)\Rightarrow((\overline{A}\Rightarrow C)\wedge(B\Rightarrow C)))$

passive waiting active priority fired target changed

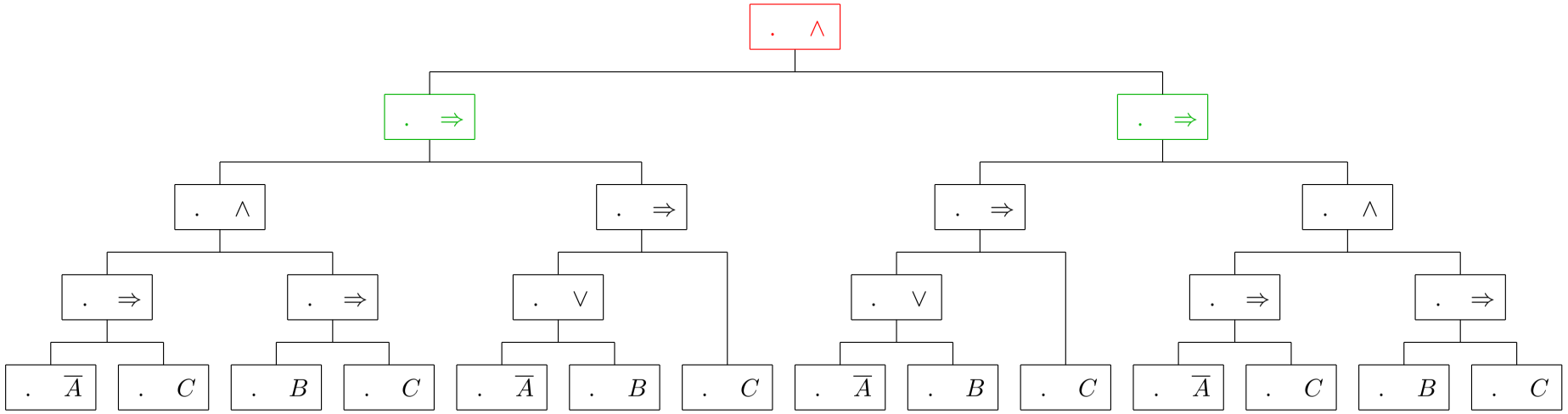

$(((\overline{A}\Rightarrow C)\wedge(B\Rightarrow C))\Rightarrow((\overline{A}\vee B)\Rightarrow C))\wedge(((\overline{A}\vee B)\Rightarrow C)\Rightarrow((\overline{A}\Rightarrow C)\wedge(B\Rightarrow C)))$

passive waiting active priority fired target changed

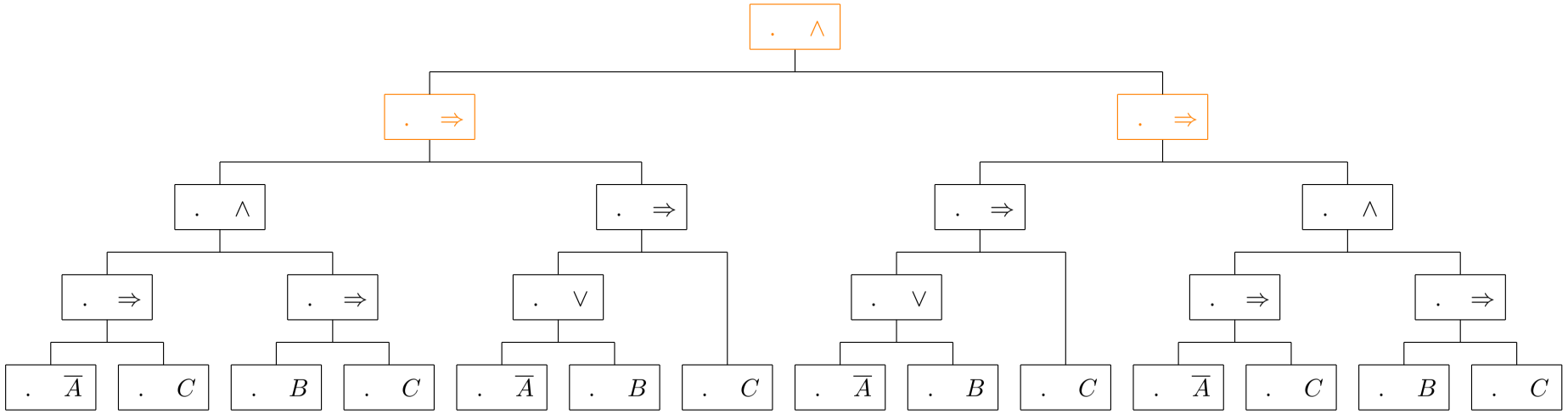

$(((\overline{A}\Rightarrow C)\wedge(B\Rightarrow C))\Rightarrow((\overline{A}\vee B)\Rightarrow C))\wedge(((\overline{A}\vee B)\Rightarrow C)\Rightarrow((\overline{A}\Rightarrow C)\wedge(B\Rightarrow C)))$

passive waiting active priority fired target changed

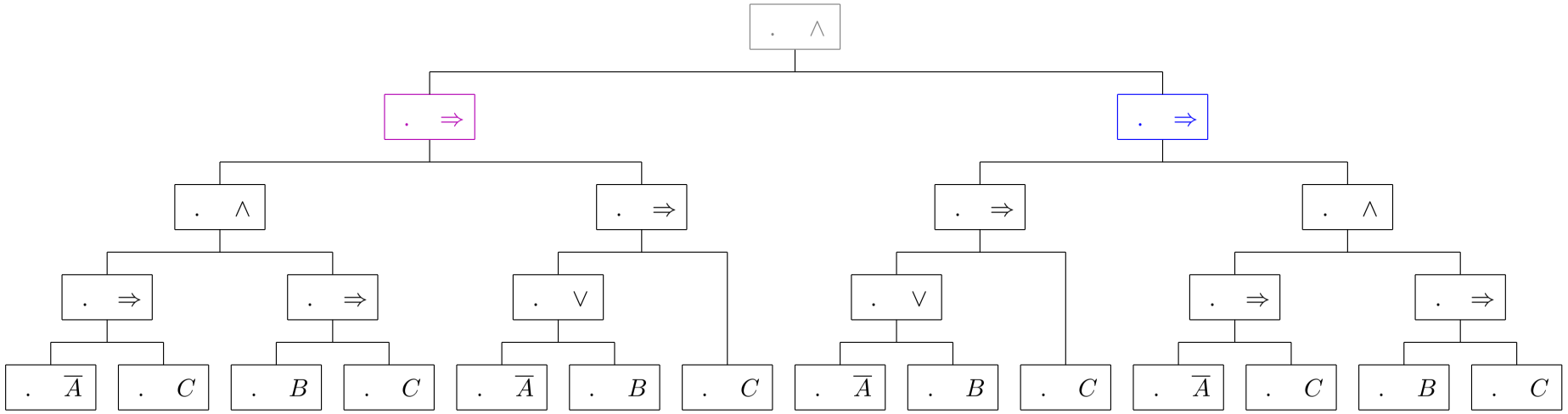

$$(((\overline{A}\Rightarrow C)\wedge(B\Rightarrow C))\Rightarrow((\overline{A}\vee B)\Rightarrow C))\wedge(((\overline{A}\vee B)\Rightarrow C)\Rightarrow((\overline{A}\Rightarrow C)\wedge(B\Rightarrow C)))$$

passive waiting active priority fired target changed

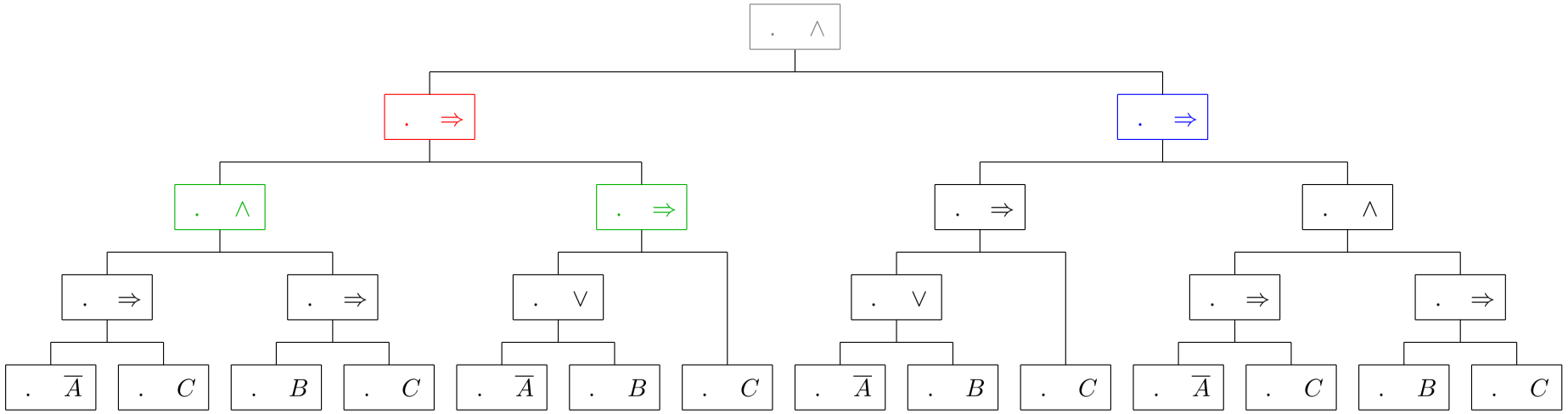

$$(((\overline{A}\Rightarrow C)\wedge(B\Rightarrow C))\Rightarrow((\overline{A}\vee B)\Rightarrow C))\wedge(((\overline{A}\vee B)\Rightarrow C)\Rightarrow((\overline{A}\Rightarrow C)\wedge(B\Rightarrow C)))$$

passive waiting active priority fired target changed

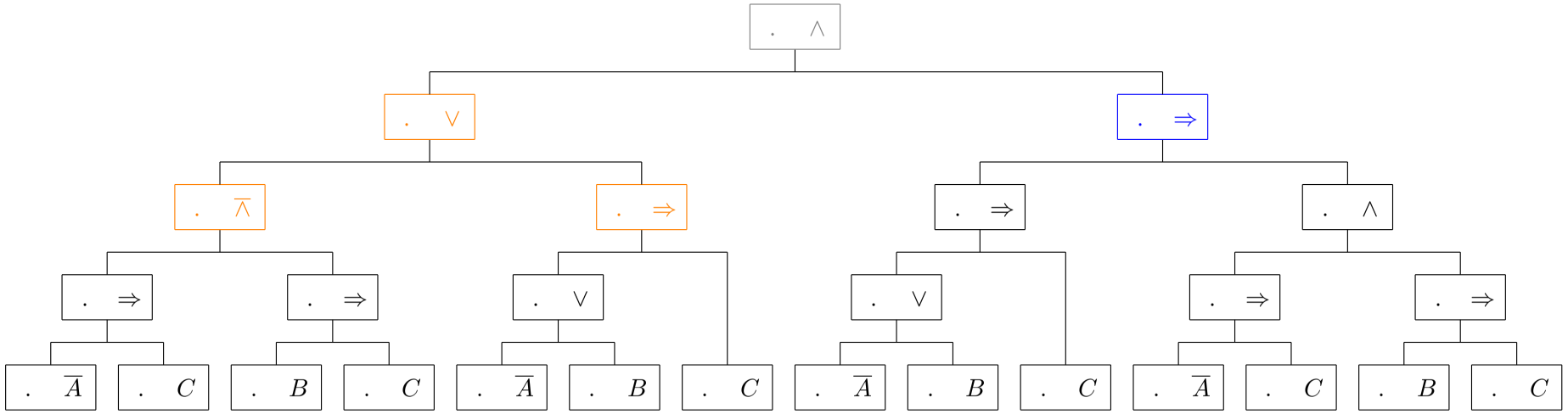

$(((\overline{A}\Rightarrow C)\overline{\wedge}(B\Rightarrow C))\vee((\overline{A}\vee B)\Rightarrow C))\wedge(((\overline{A}\vee B)\Rightarrow C)\Rightarrow((\overline{A}\Rightarrow C)\wedge(B\Rightarrow C)))$

passive waiting active priority fired target changed

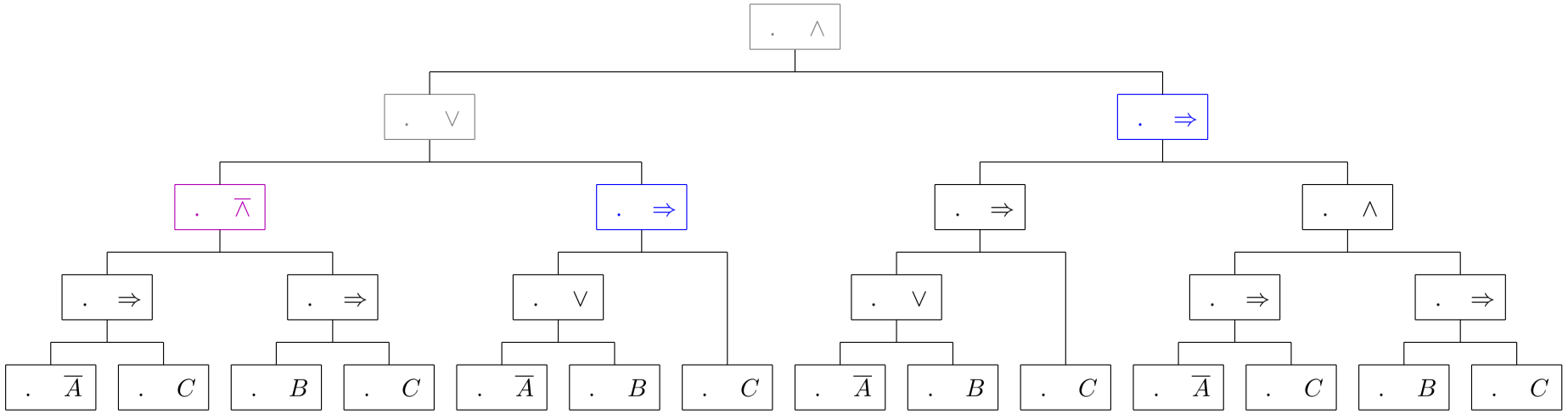

$(((\overline{A}\Rightarrow C)\overline{\wedge}(B\Rightarrow C))\vee((\overline{A}\vee B)\Rightarrow C))\wedge(((\overline{A}\vee B)\Rightarrow C)\Rightarrow((\overline{A}\Rightarrow C)\wedge(B\Rightarrow C)))$

passive waiting active priority fired target changed

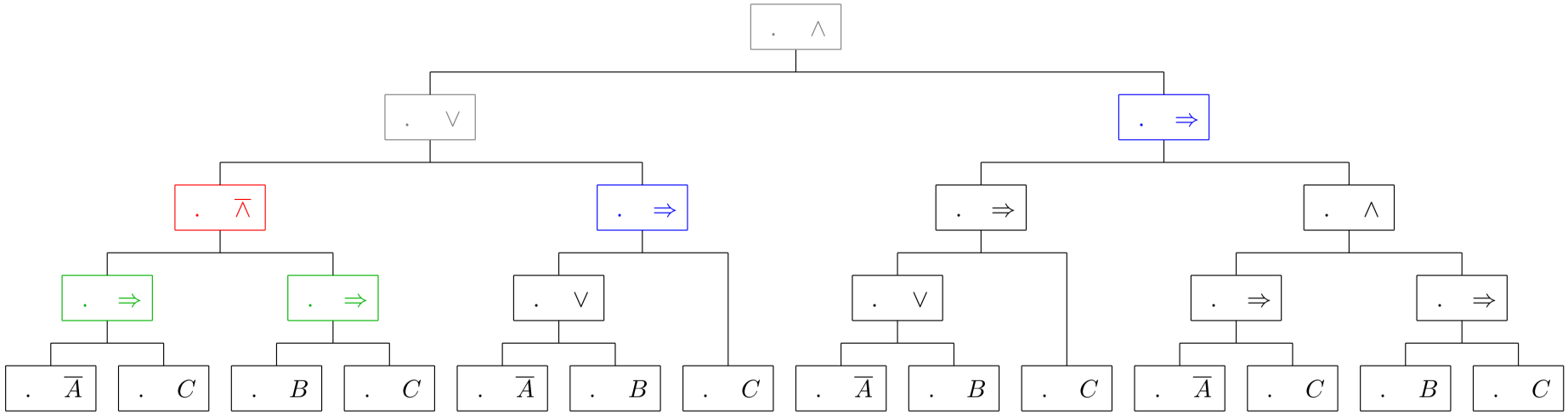

$$(((\overline{A}\Rightarrow C)\overline{\wedge}(B\Rightarrow C))\vee((\overline{A}\vee B)\Rightarrow C))\wedge(((\overline{A}\vee B)\Rightarrow C)\Rightarrow((\overline{A}\Rightarrow C)\wedge(B\Rightarrow C)))$$

passive waiting active priority fired target changed

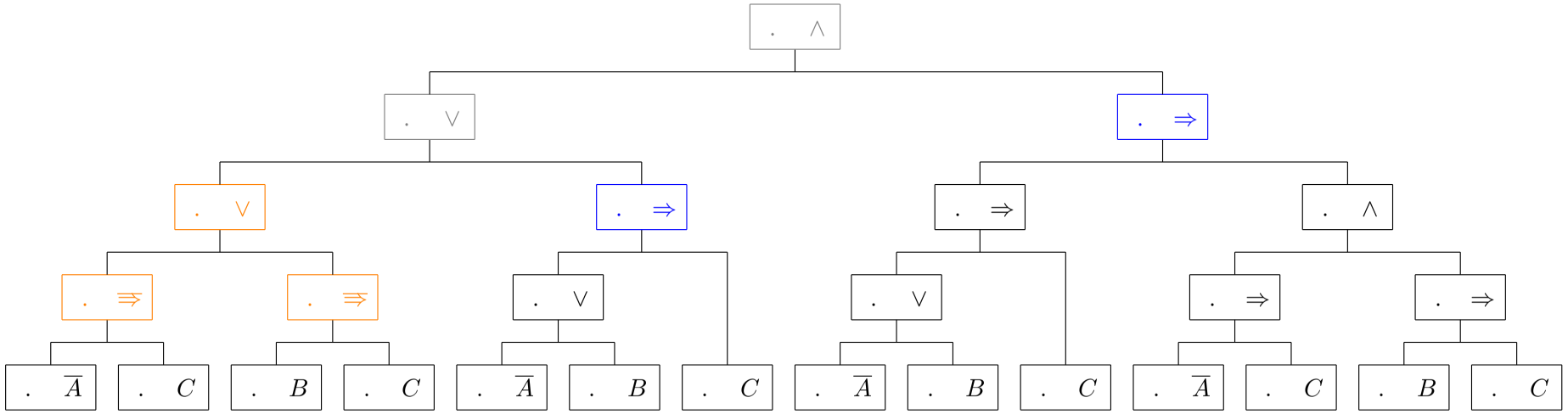

$(((\overline{A}⇛C)\vee(B⇛C))\vee((\overline{A}\vee B)\Rightarrow C))\wedge(((\overline{A}\vee B)\Rightarrow C)\Rightarrow((\overline{A}\Rightarrow C)\wedge(B\Rightarrow C)))$

passive waiting active priority fired target changed

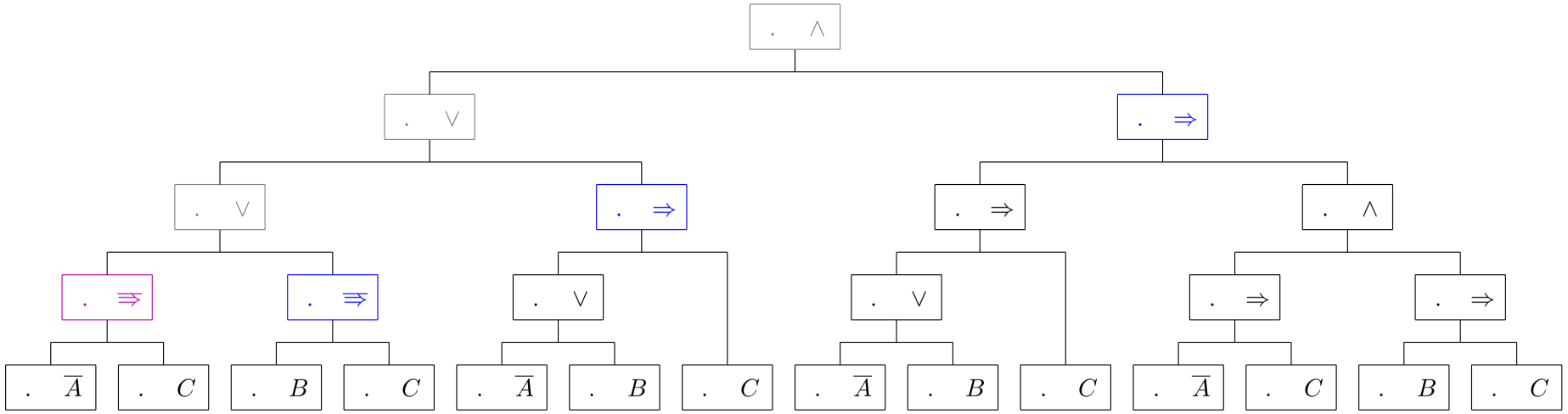

$(((\overline{A} \Rrightarrow C) \vee (B \Rrightarrow C)) \vee ((\overline{A} \vee B) \Rightarrow C)) \wedge (((\overline{A} \vee B) \Rightarrow C) \Rightarrow ((\overline{A} \Rightarrow C) \wedge (B \Rightarrow C)))$

passive waiting active priority fired target changed

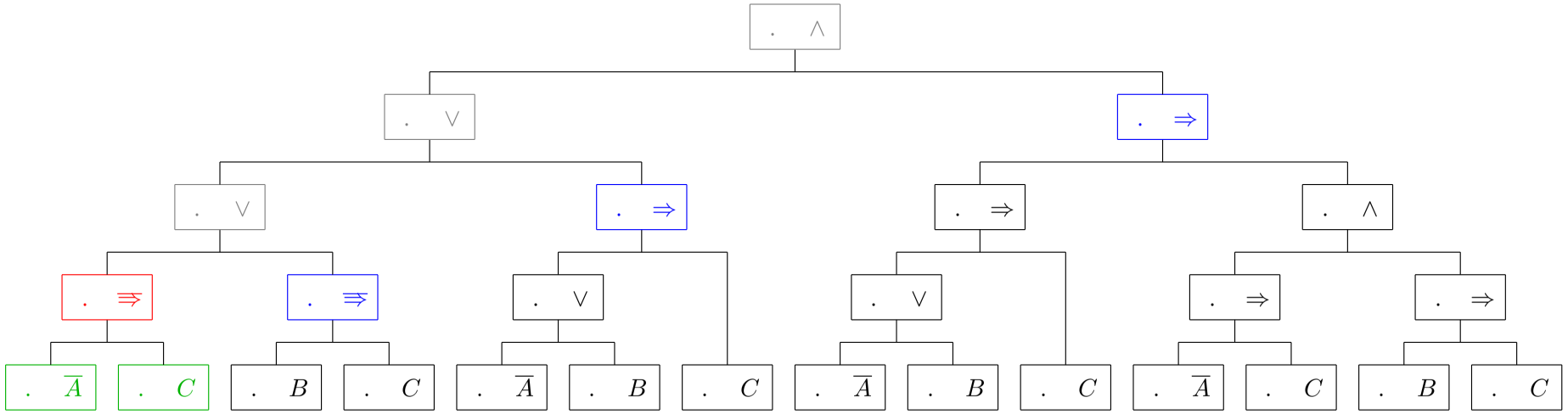

$(((\overline{A} \Rrightarrow C) \vee (B \Rrightarrow C)) \vee ((\overline{A} \vee B) \Rightarrow C)) \wedge (((\overline{A} \vee B) \Rightarrow C) \Rightarrow ((\overline{A} \Rightarrow C) \wedge (B \Rightarrow C)))$

passive waiting active priority fired target changed

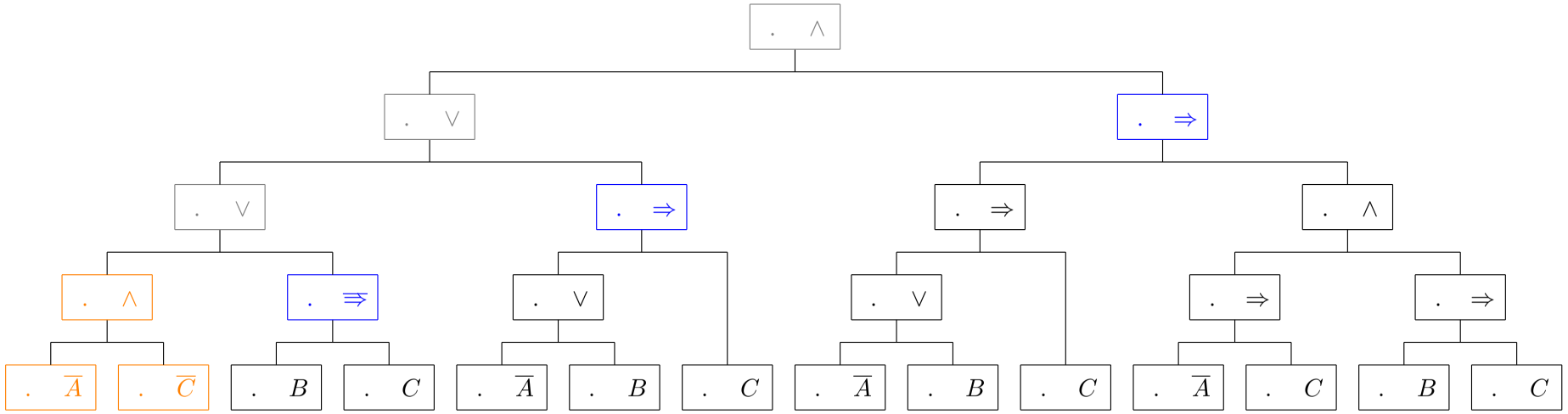

$$(((\overline{A}\wedge\overline{C})\vee(B\Rrightarrow C))\vee((\overline{A}\vee B)\Rightarrow C))\wedge(((\overline{A}\vee B)\Rightarrow C)\Rightarrow((\overline{A}\Rightarrow C)\wedge(B\Rightarrow C)))$$

passive waiting active priority fired target changed

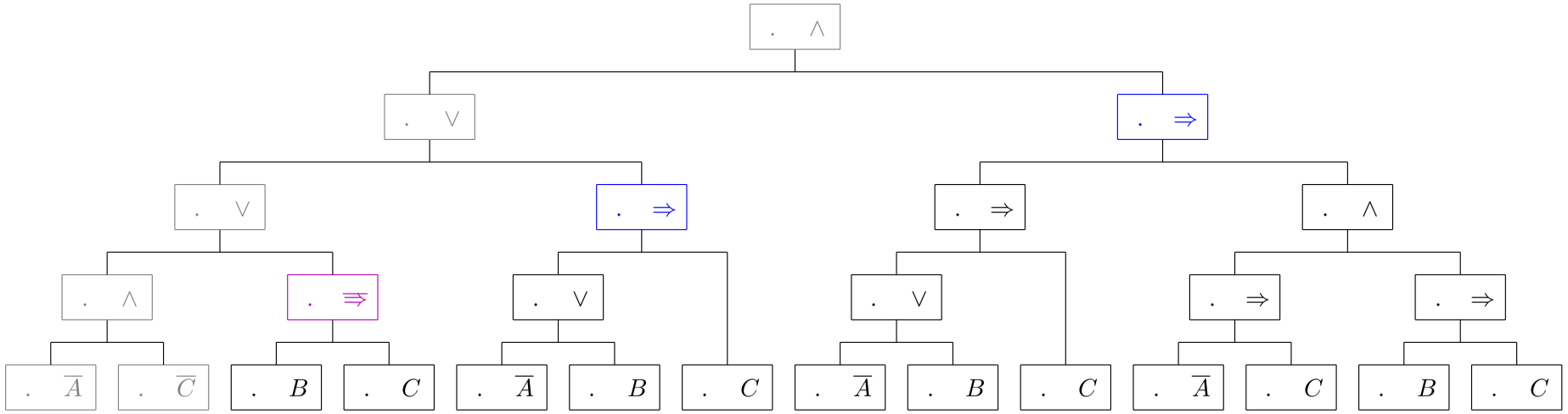

$$(((\overline{A}\wedge\overline{C})\vee(B\Rrightarrow C))\vee((\overline{A}\vee B)\Rightarrow C))\wedge(((\overline{A}\vee B)\Rightarrow C)\Rightarrow((\overline{A}\Rightarrow C)\wedge(B\Rightarrow C)))$$

passive waiting active priority fired target changed

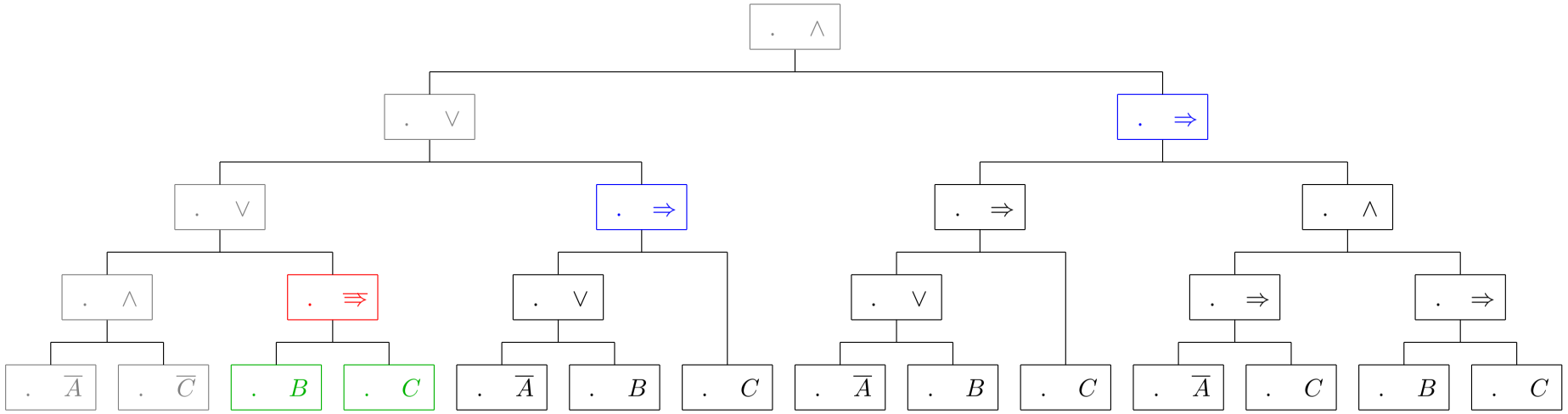

$$(((\overline{A}\wedge\overline{C})\vee(B\Rrightarrow C))\vee((\overline{A}\vee B)\Rightarrow C))\wedge(((\overline{A}\vee B)\Rightarrow C)\Rightarrow((\overline{A}\Rightarrow C)\wedge(B\Rightarrow C)))$$

passive waiting active priority fired target changed

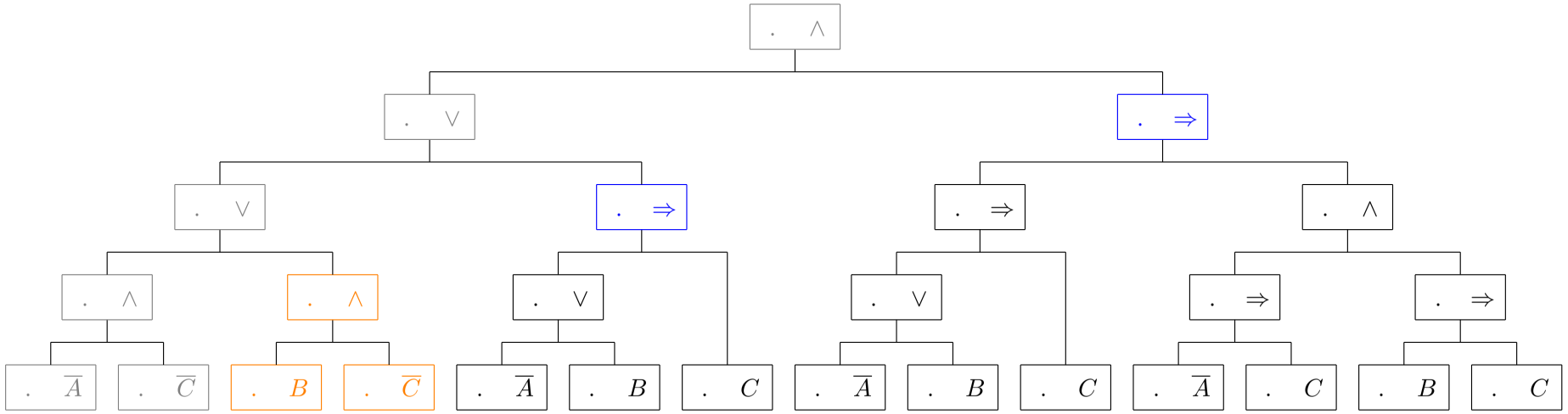

$(((\overline{A}\wedge\overline{C})\vee(B\wedge\overline{C}))\vee((\overline{A}\vee B)\Rightarrow C))\wedge(((\overline{A}\vee B)\Rightarrow C)\Rightarrow((\overline{A}\Rightarrow C)\wedge(B\Rightarrow C)))$

passive waiting active priority fired target changed

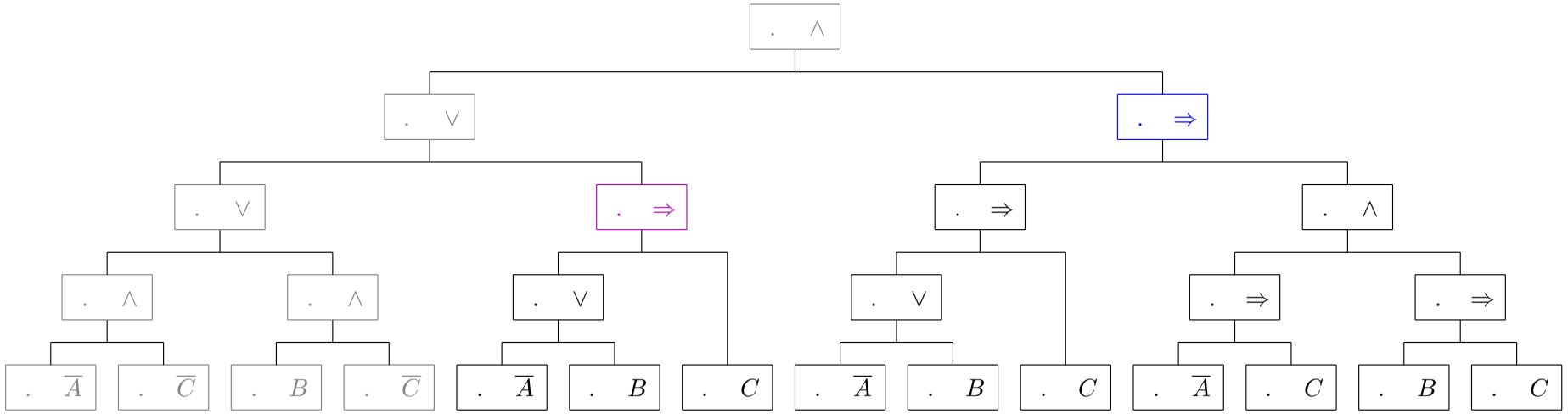

$(((\overline{A}\wedge\overline{C})\vee(B\wedge\overline{C}))\vee((\overline{A}\vee B)\Rightarrow C))\wedge(((\overline{A}\vee B)\Rightarrow C)\Rightarrow((\overline{A}\Rightarrow C)\wedge(B\Rightarrow C)))$

passive waiting active priority fired target changed

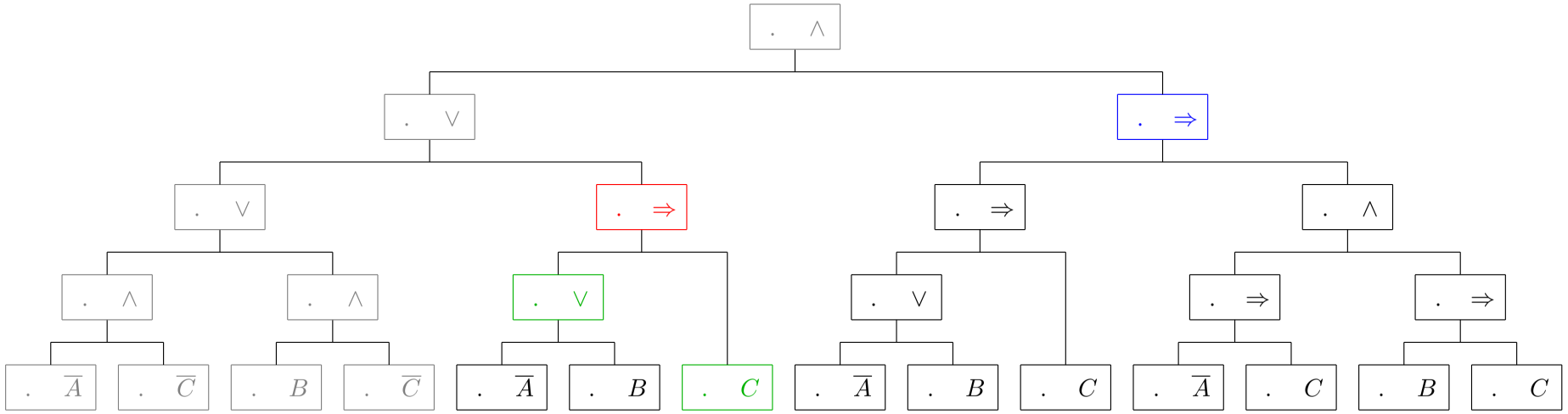

$$(((\overline{A}\wedge\overline{C})\vee(B\wedge\overline{C}))\vee((\overline{A}\vee B)\Rightarrow C))\wedge(((\overline{A}\vee B)\Rightarrow C)\Rightarrow((\overline{A}\Rightarrow C)\wedge(B\Rightarrow C)))$$

passive waiting active priority fired target changed

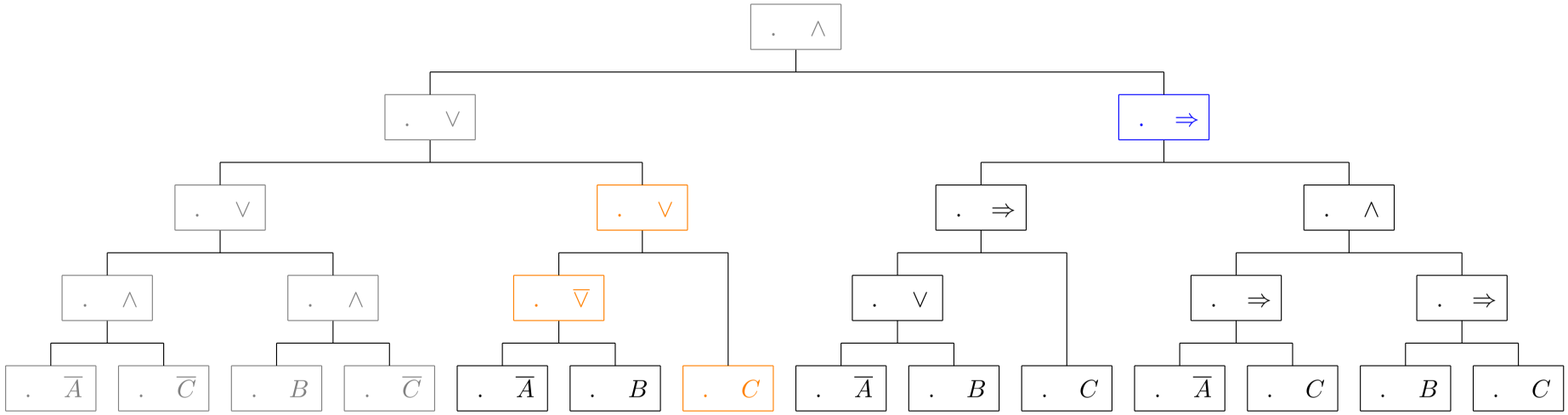

$$(((\overline{A}\wedge\overline{C})\vee(B\wedge\overline{C}))\vee((\overline{A}\,\overline{\vee}\,B)\vee C))\wedge(((\overline{A}\vee B)\Rightarrow C)\Rightarrow((\overline{A}\Rightarrow C)\wedge(B\Rightarrow C)))$$

passive waiting active priority fired target changed

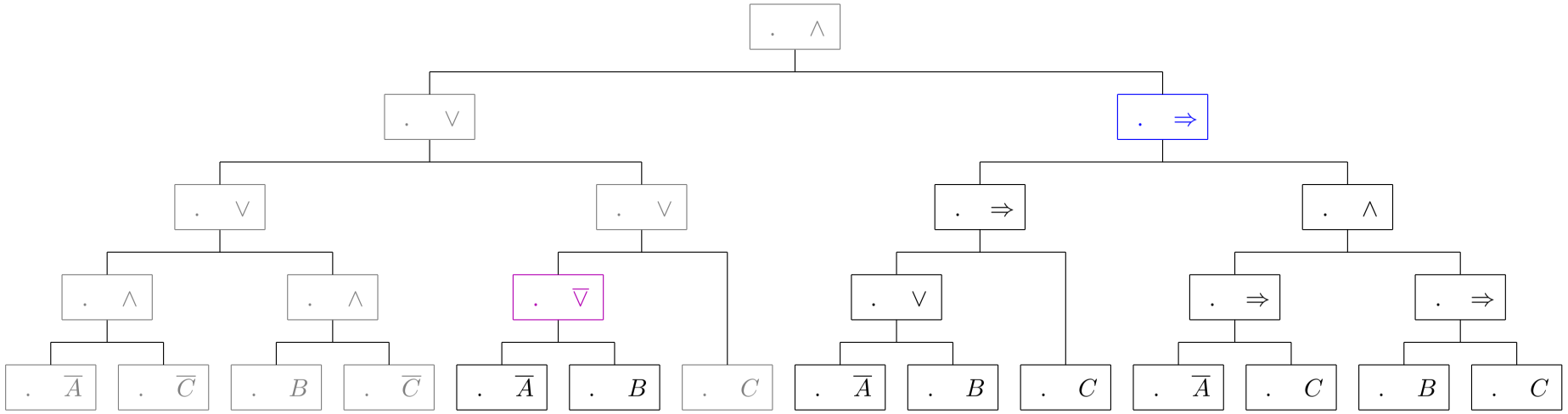

$(((\overline{A}\wedge\overline{C})\vee(B\wedge\overline{C}))\vee((\overline{A}\,\overline{\vee}\,B)\vee C))\wedge(((\overline{A}\vee B)\Rightarrow C)\Rightarrow((\overline{A}\Rightarrow C)\wedge(B\Rightarrow C)))$

passive waiting active priority fired target changed

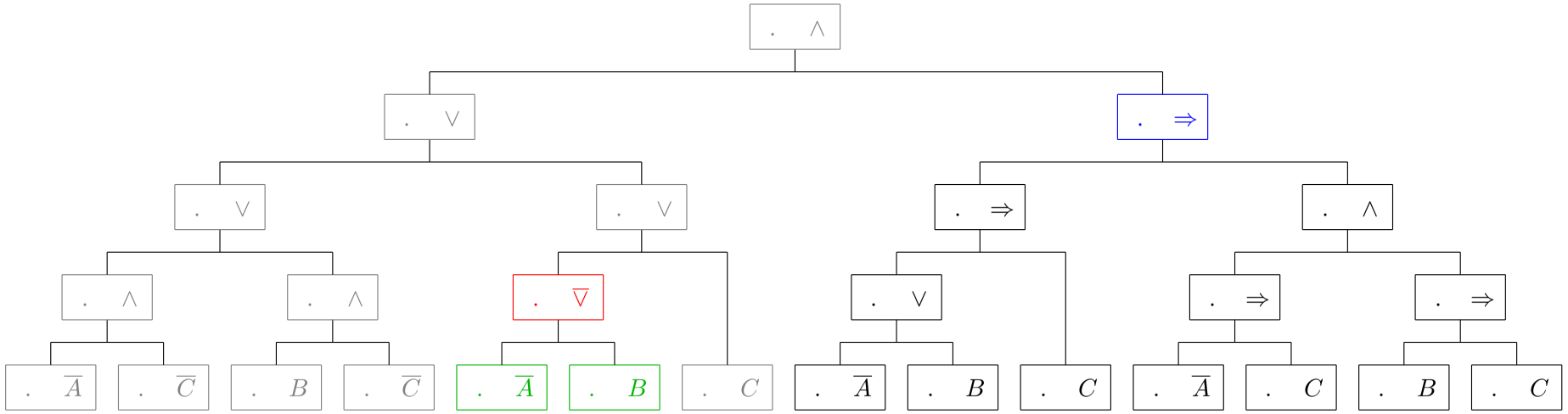

$$(((\overline{A}\wedge\overline{C})\vee(B\wedge\overline{C}))\vee((\overline{A}\,\overline{\vee}\,B)\vee C))\wedge(((\overline{A}\vee B)\Rightarrow C)\Rightarrow((\overline{A}\Rightarrow C)\wedge(B\Rightarrow C)))$$

passive waiting active priority fired target changed

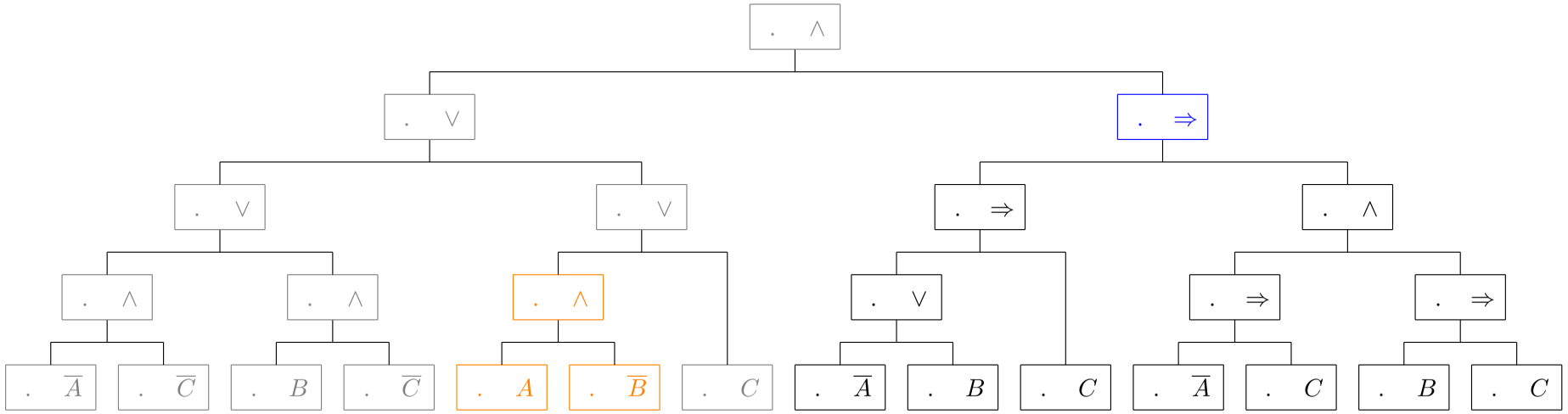

$(((\overline{A}\wedge\overline{C})\vee(B\wedge\overline{C}))\vee((A\wedge\overline{B})\vee C))\wedge(((\overline{A}\vee B)\Rightarrow C)\Rightarrow((\overline{A}\Rightarrow C)\wedge(B\Rightarrow C)))$

passive waiting active priority fired target changed

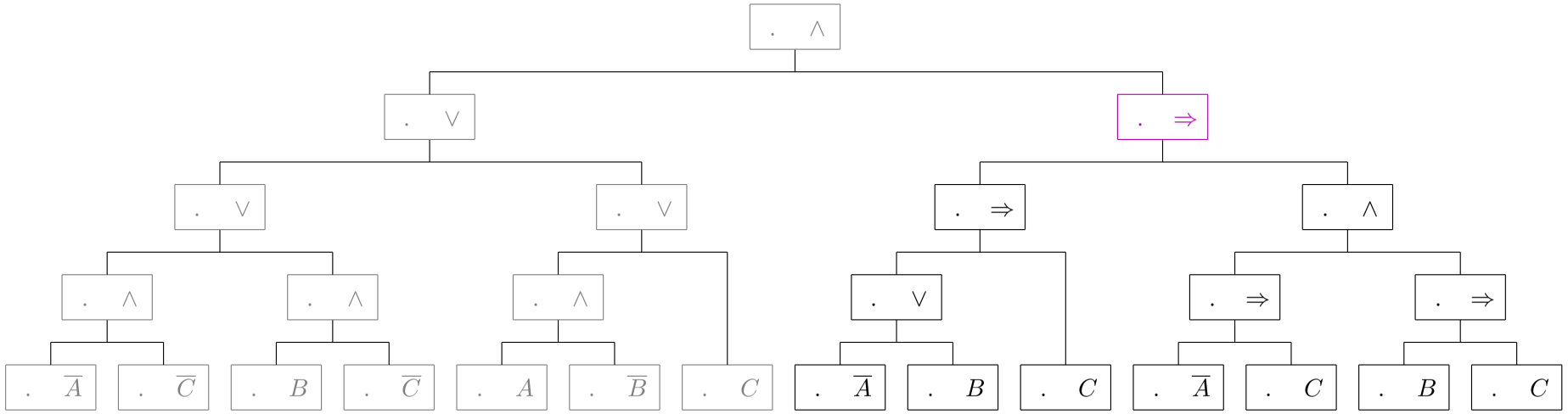

$(((\overline{A}\wedge\overline{C})\vee(B\wedge\overline{C}))\vee((A\wedge\overline{B})\vee C))\wedge(((\overline{A}\vee B)\Rightarrow C)\Rightarrow((\overline{A}\Rightarrow C)\wedge(B\Rightarrow C)))$

passive waiting active priority fired target changed

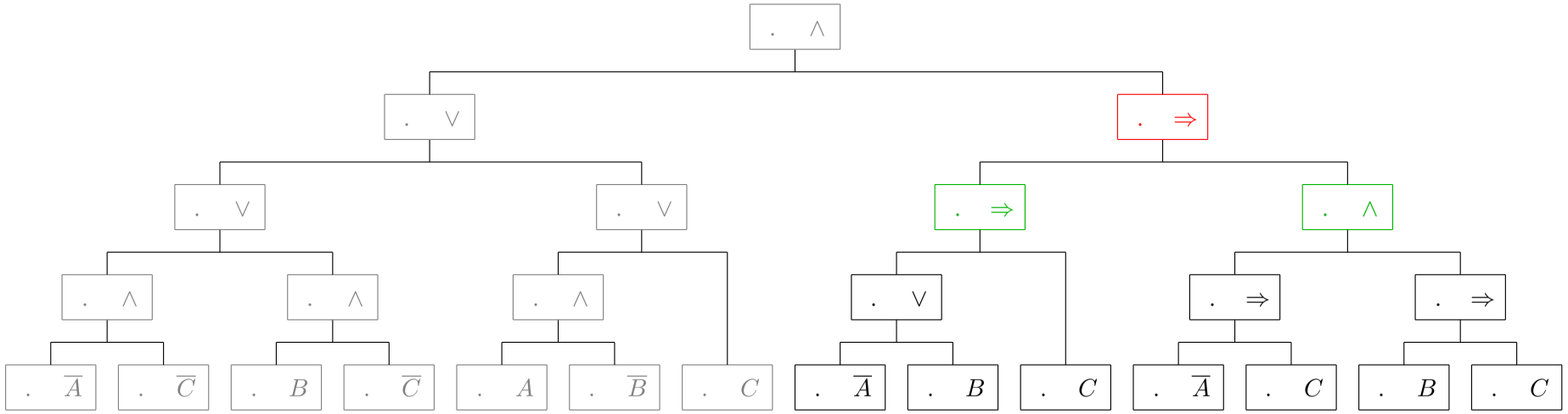

$$(((\overline{A}\wedge\overline{C})\vee(B\wedge\overline{C}))\vee((A\wedge\overline{B})\vee C))\wedge(((\overline{A}\vee B)\Rightarrow C)\Rightarrow((\overline{A}\Rightarrow C)\wedge(B\Rightarrow C)))$$

passive waiting active priority fired target changed

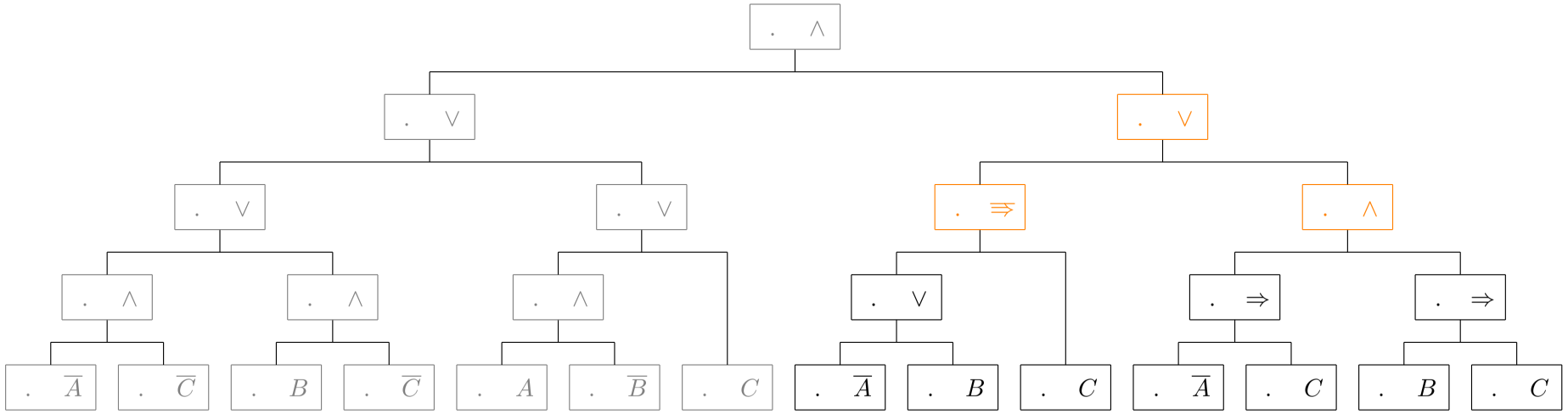

$(((\overline{A}\wedge\overline{C})\vee(B\wedge\overline{C}))\vee((A\wedge\overline{B})\vee C))\wedge(((\overline{A}\vee B)\Rrightarrow C)\vee((\overline{A}\Rightarrow C)\wedge(B\Rightarrow C)))$

passive waiting active priority fired target changed

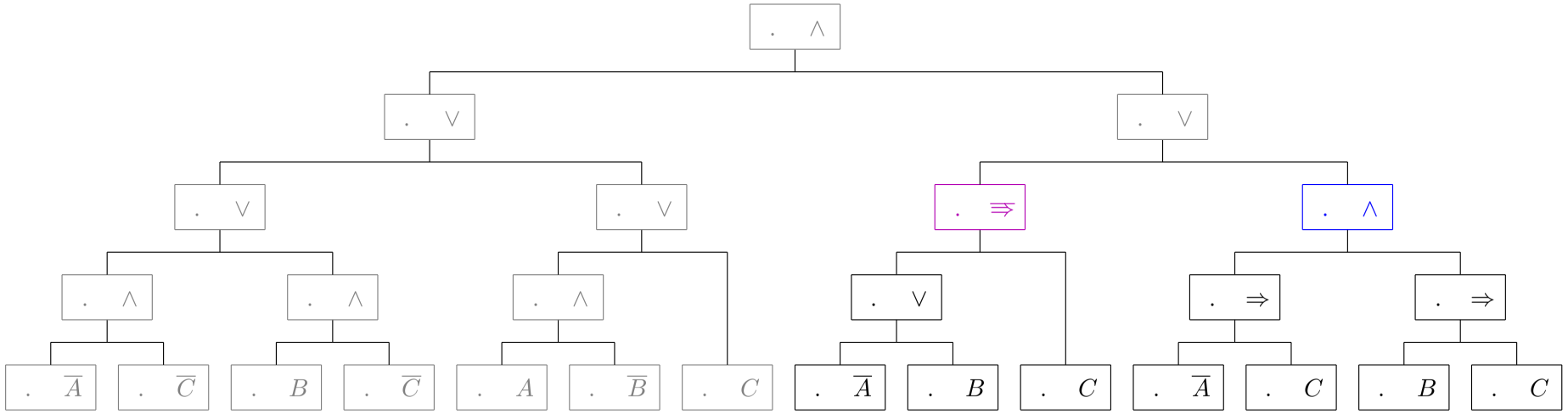

$(((\overline{A}\wedge\overline{C})\vee(B\wedge\overline{C}))\vee((A\wedge\overline{B})\vee C))\wedge(((\overline{A}\vee B)\Rrightarrow C)\vee((\overline{A}\Rightarrow C)\wedge(B\Rightarrow C)))$

passive waiting active priority fired target changed

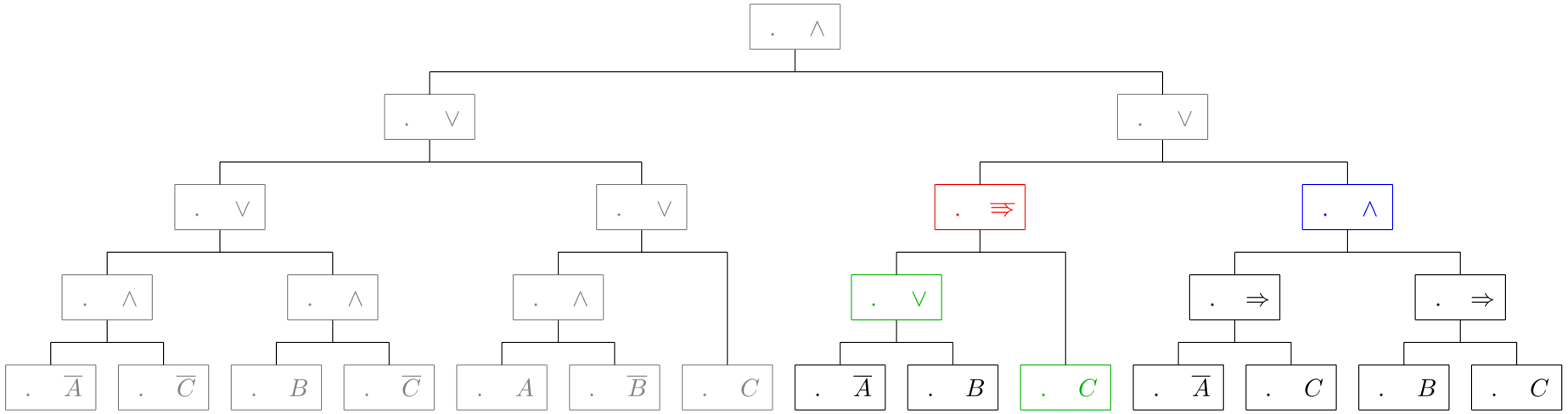

$(((\overline{A}\wedge\overline{C})\vee(B\wedge\overline{C}))\vee((A\wedge\overline{B})\vee C))\wedge(((\overline{A}\vee B)\Rrightarrow C)\vee((\overline{A}\Rightarrow C)\wedge(B\Rightarrow C)))$

passive waiting active priority fired target changed

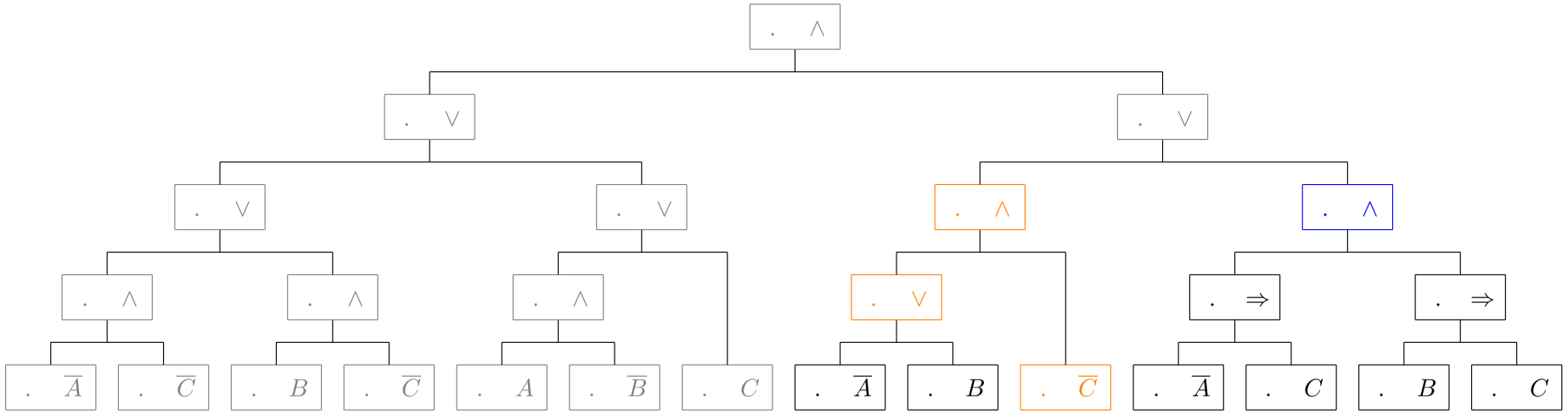

$$(((\overline{A}\wedge\overline{C})\vee(B\wedge\overline{C}))\vee((A\wedge\overline{B})\vee C))\wedge(((\overline{A}\vee B)\wedge\overline{C})\vee((\overline{A}\Rightarrow C)\wedge(B\Rightarrow C)))$$

passive waiting active priority fired target changed

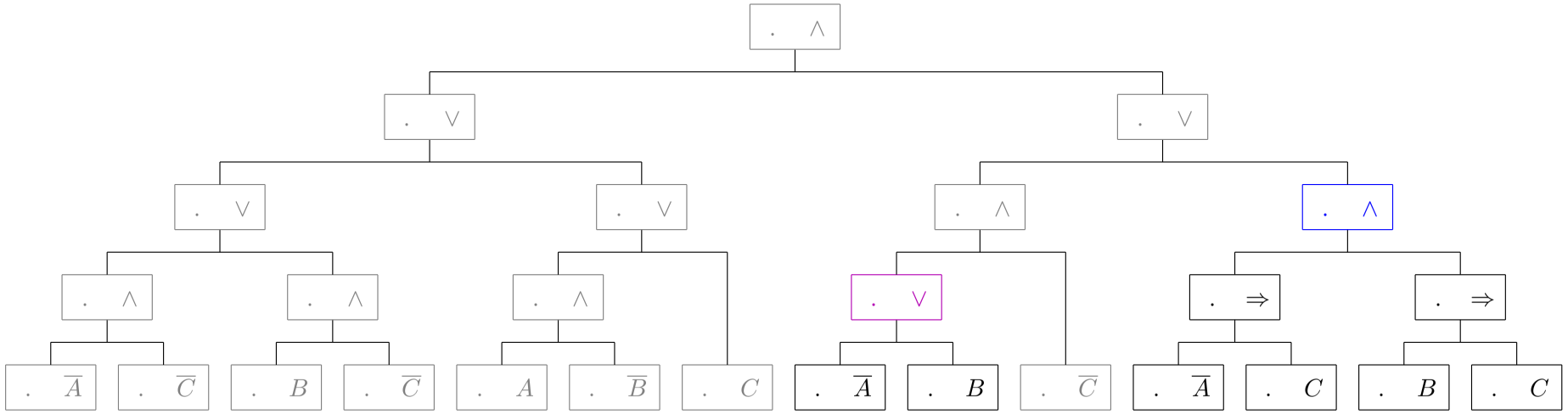

$(((\overline{A}\wedge\overline{C})\vee(B\wedge\overline{C}))\vee((A\wedge\overline{B})\vee C))\wedge(((\overline{A}\vee B)\wedge\overline{C})\vee((\overline{A}\Rightarrow C)\wedge(B\Rightarrow C)))$

passive waiting active priority fired target changed

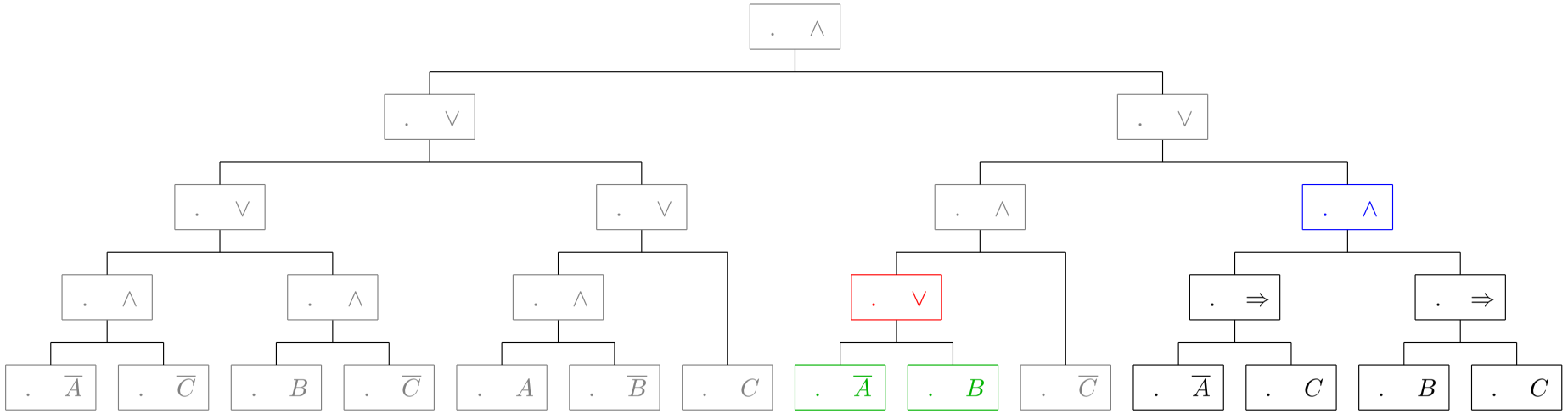

$$(((\overline{A}\wedge\overline{C})\vee(B\wedge\overline{C}))\vee((A\wedge\overline{B})\vee C))\wedge(((\overline{A}\vee B)\wedge\overline{C})\vee((\overline{A}\Rightarrow C)\wedge(B\Rightarrow C)))$$

passive waiting active priority fired target changed

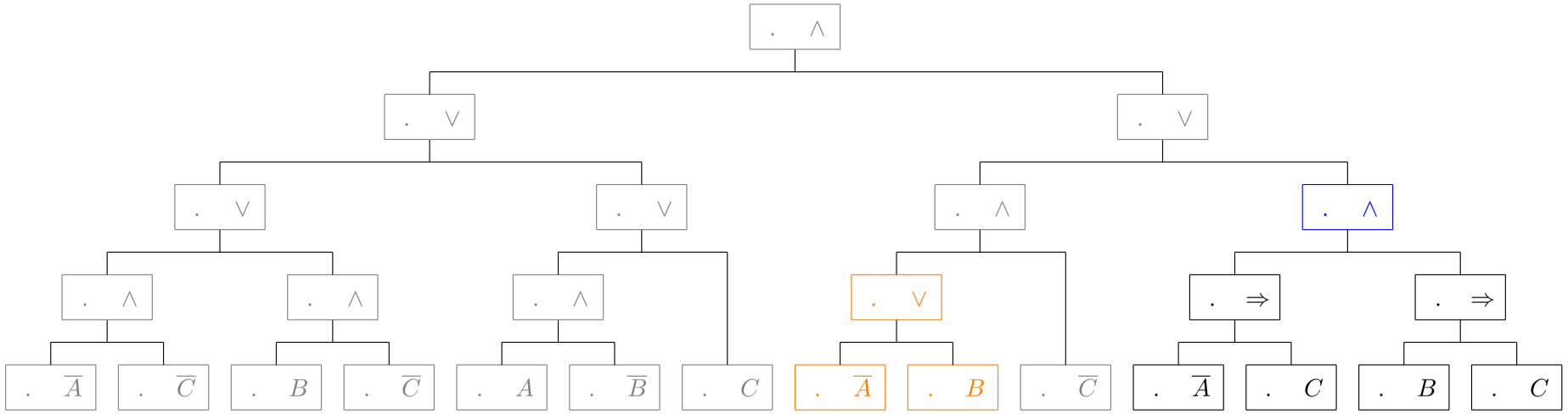

$$(((\overline{A}\wedge\overline{C})\vee(B\wedge\overline{C}))\vee((A\wedge\overline{B})\vee C))\wedge(((\overline{A}\vee B)\wedge\overline{C})\vee((\overline{A}\Rightarrow C)\wedge(B\Rightarrow C)))$$

passive waiting active priority fired target changed

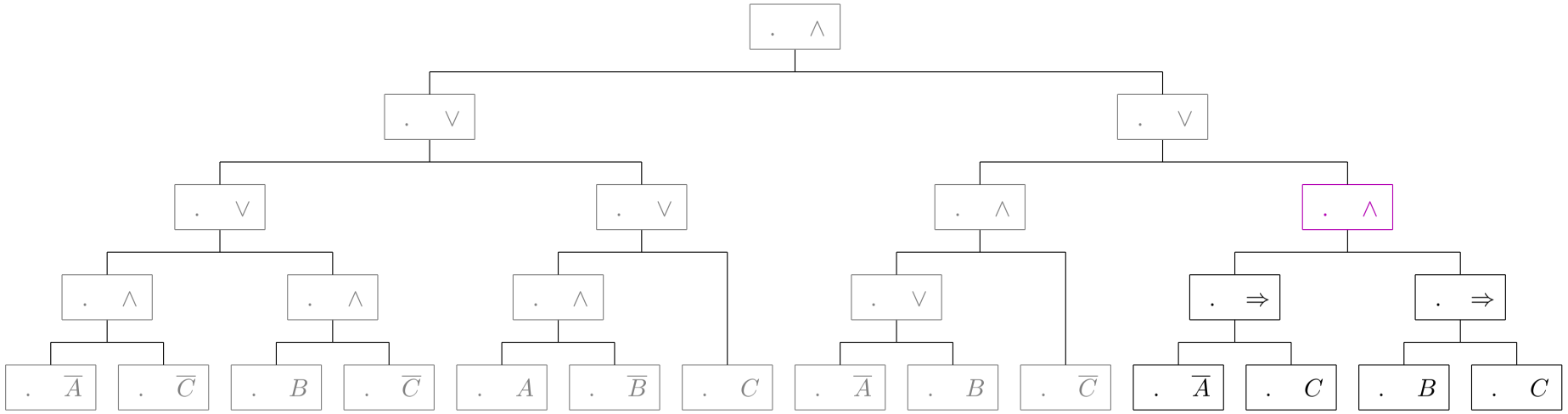

$$(((\overline{A}\wedge\overline{C})\vee(B\wedge\overline{C}))\vee((A\wedge\overline{B})\vee C))\wedge(((\overline{A}\vee B)\wedge\overline{C})\vee((\overline{A}\Rightarrow C)\wedge(B\Rightarrow C)))$$

passive waiting active priority fired target changed

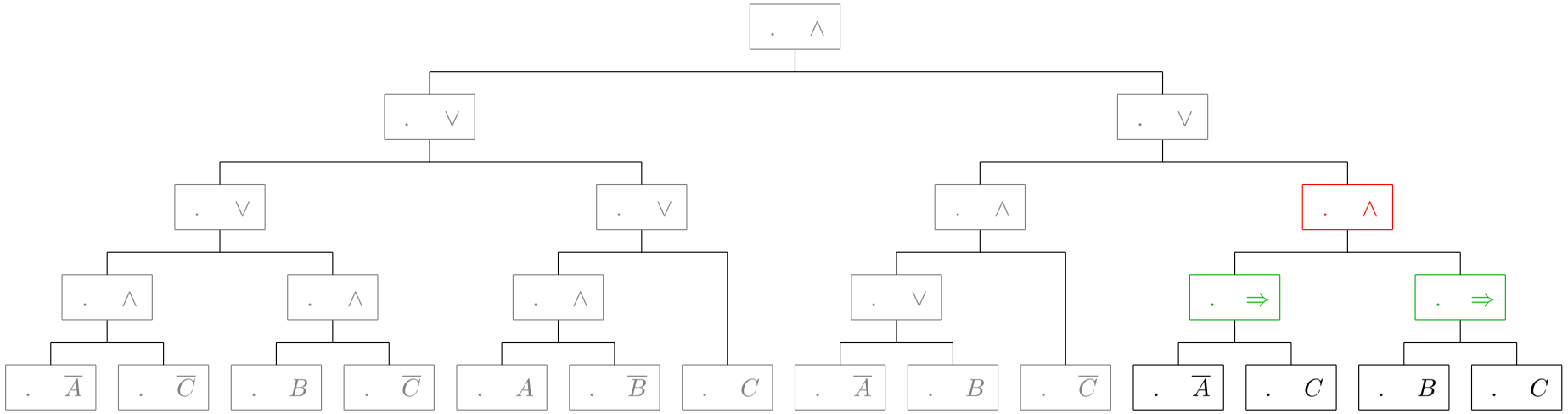

$(((\overline{A}\wedge\overline{C})\vee(B\wedge\overline{C}))\vee((A\wedge\overline{B})\vee C))\wedge(((\overline{A}\vee B)\wedge\overline{C})\vee((\overline{A}\Rightarrow C)\wedge(B\Rightarrow C)))$

passive waiting active priority fired target changed

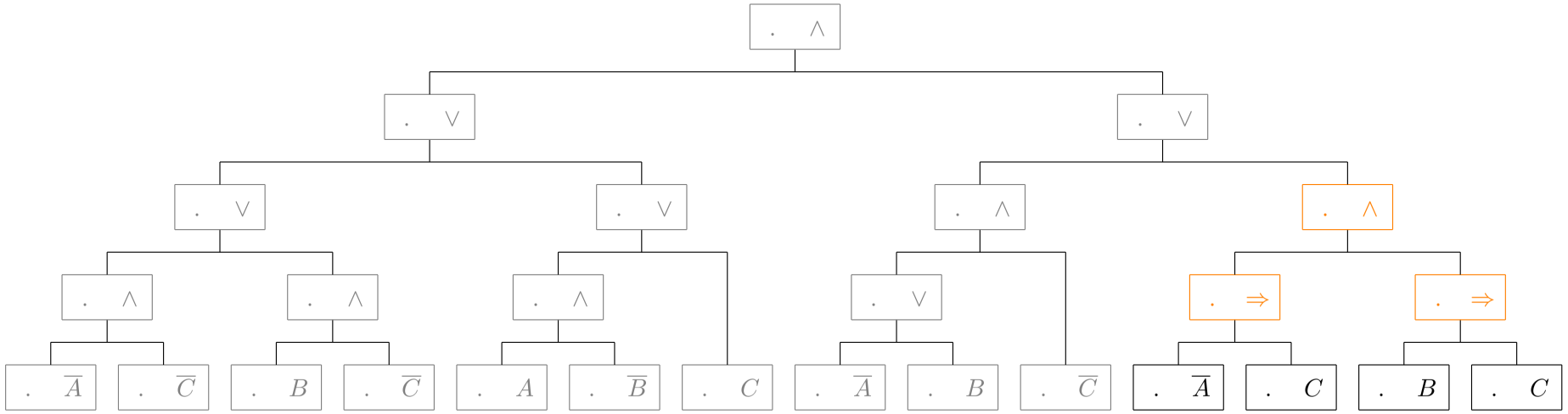

$$(((\overline{A}\wedge\overline{C})\vee(B\wedge\overline{C}))\vee((A\wedge\overline{B})\vee C))\wedge(((\overline{A}\vee B)\wedge\overline{C})\vee((\overline{A}\Rightarrow C)\wedge(B\Rightarrow C)))$$

passive waiting active priority fired target changed

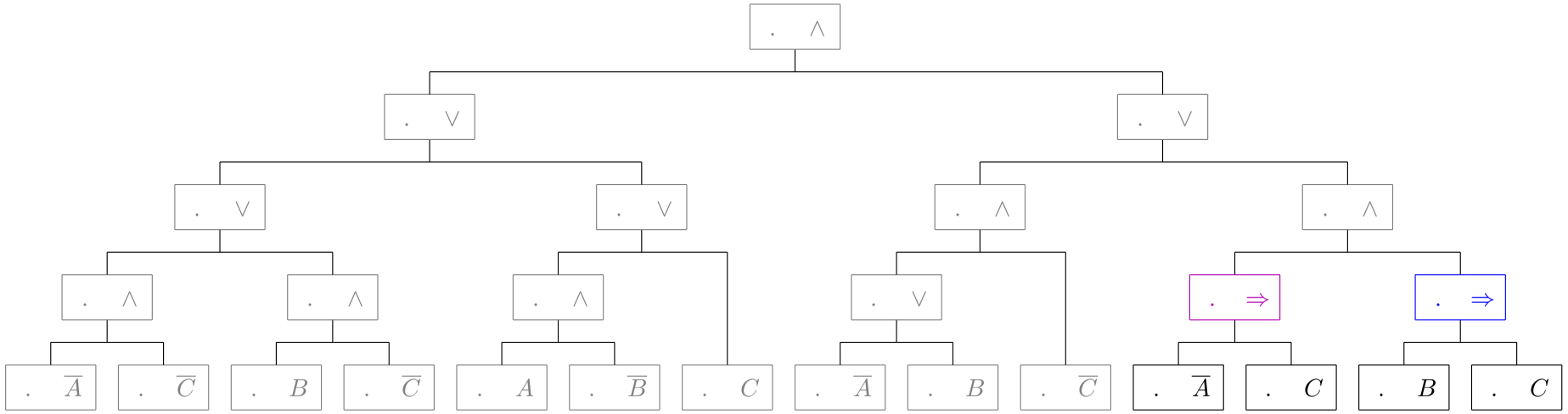

$$(((\overline{A}\wedge\overline{C})\vee(B\wedge\overline{C}))\vee((A\wedge\overline{B})\vee C))\wedge(((\overline{A}\vee B)\wedge\overline{C})\vee((\overline{A}\Rightarrow C)\wedge(B\Rightarrow C)))$$

passive waiting active priority fired target changed

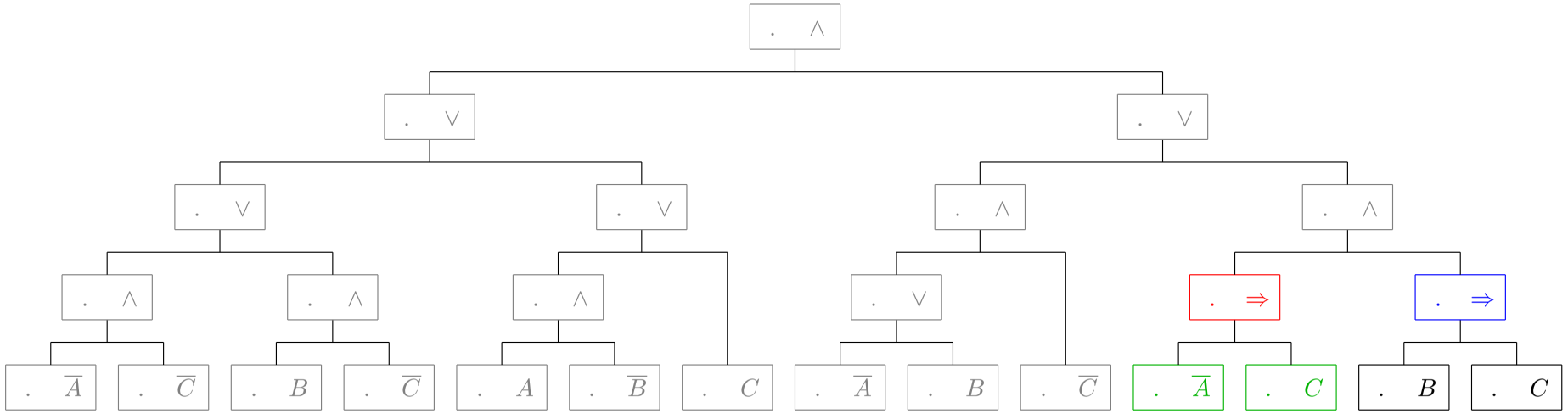

$$(((\overline{A}\wedge\overline{C})\vee(B\wedge\overline{C}))\vee((A\wedge\overline{B})\vee C))\wedge(((\overline{A}\vee B)\wedge\overline{C})\vee((\overline{A}\Rightarrow C)\wedge(B\Rightarrow C)))$$

passive waiting active priority fired target changed

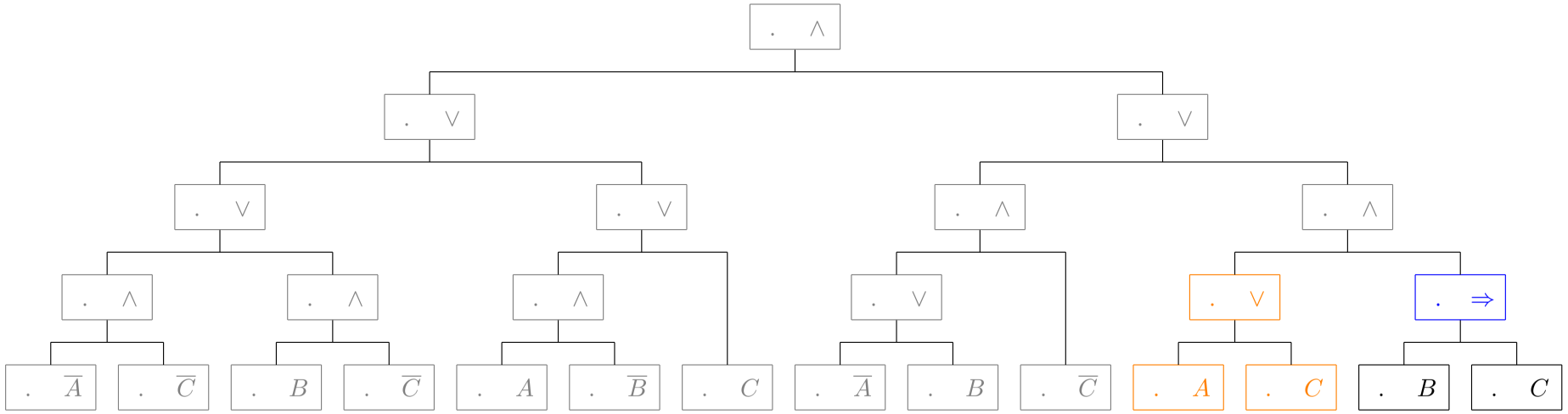

$(((\overline{A}\wedge\overline{C})\vee(B\wedge\overline{C}))\vee((A\wedge\overline{B})\vee C))\wedge(((\overline{A}\vee B)\wedge\overline{C})\vee((A\vee C)\wedge(B\Rightarrow C)))$

passive waiting active priority fired target changed

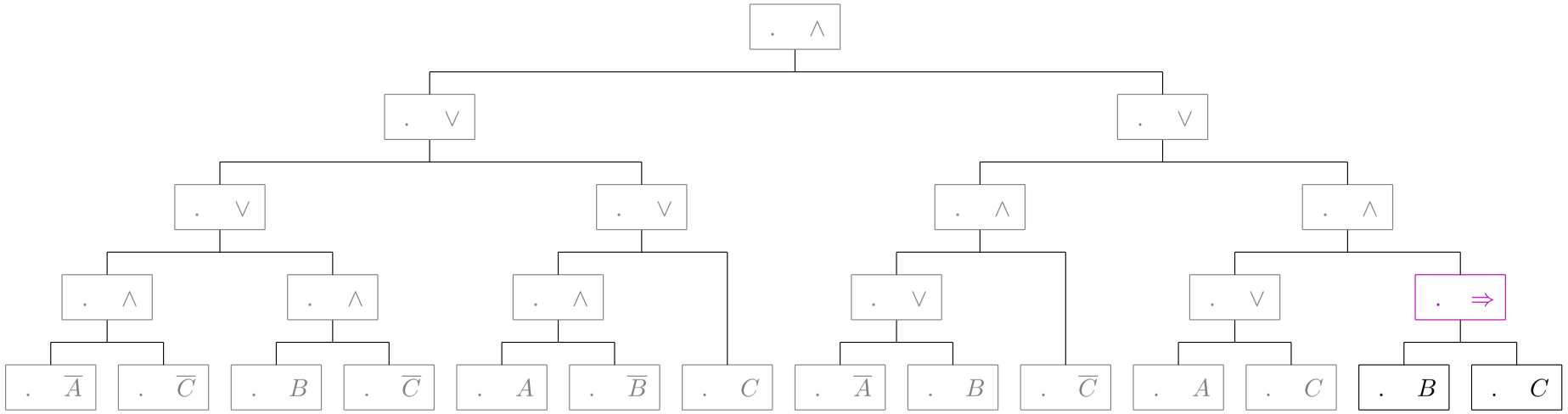

$(((\overline{A}\wedge\overline{C})\vee(B\wedge\overline{C}))\vee((A\wedge\overline{B})\vee C))\wedge(((\overline{A}\vee B)\wedge\overline{C})\vee((A\vee C)\wedge(B\Rightarrow C)))$

passive waiting active priority fired target changed

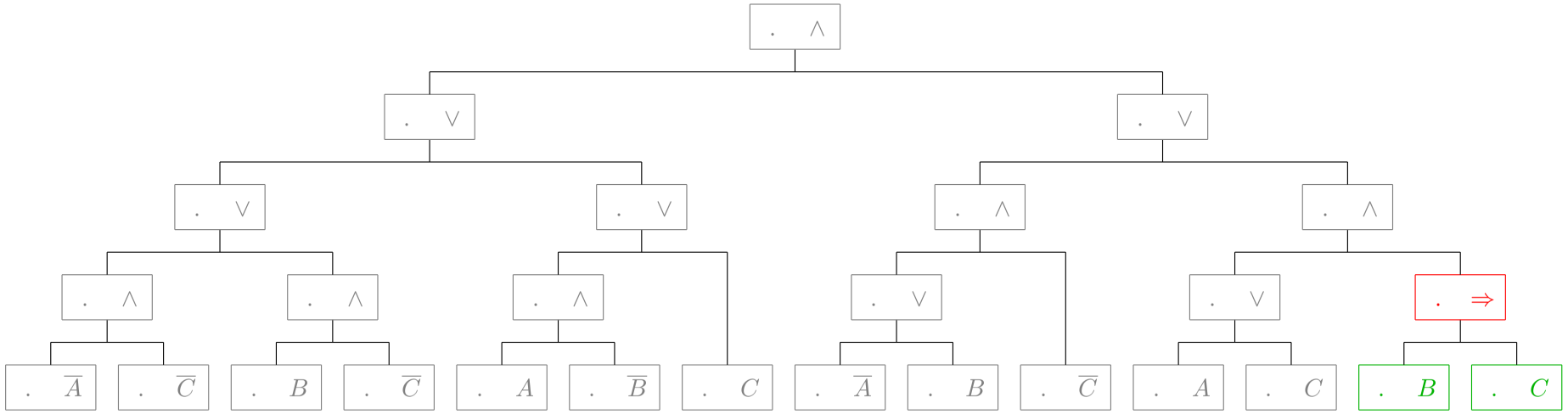

$(((\overline{A}\wedge\overline{C})\vee(B\wedge\overline{C}))\vee((A\wedge\overline{B})\vee C))\wedge(((\overline{A}\vee B)\wedge\overline{C})\vee((A\vee C)\wedge(B\Rightarrow C)))$

passive waiting active priority fired target changed

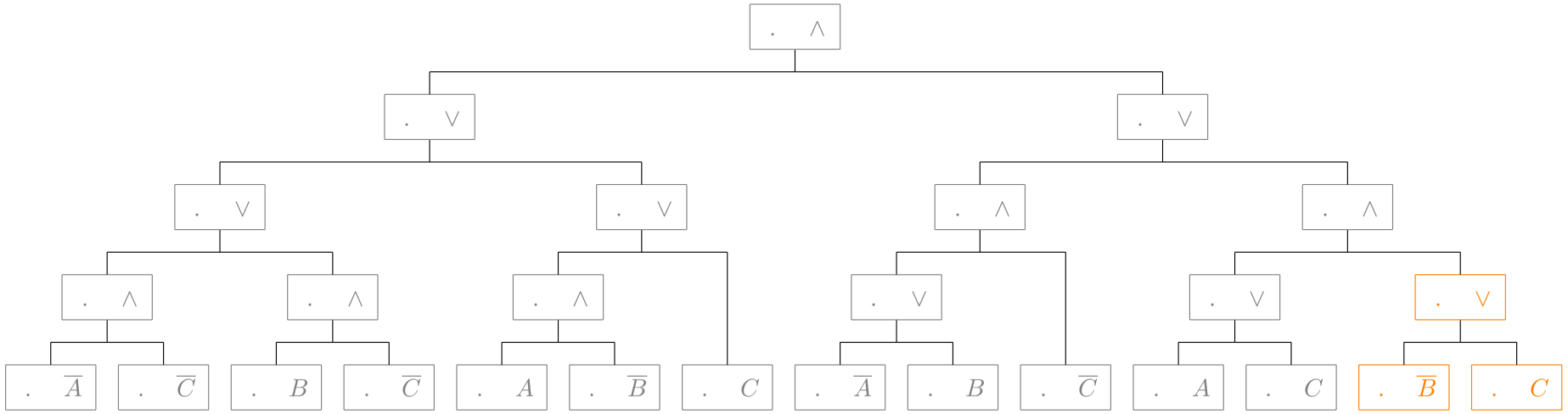

$(((\overline{A}\wedge\overline{C})\vee(B\wedge\overline{C}))\vee((A\wedge\overline{B})\vee C))\wedge(((\overline{A}\vee B)\wedge\overline{C})\vee((A\vee C)\wedge(\overline{B}\vee C)))$

passive waiting active priority fired target changed

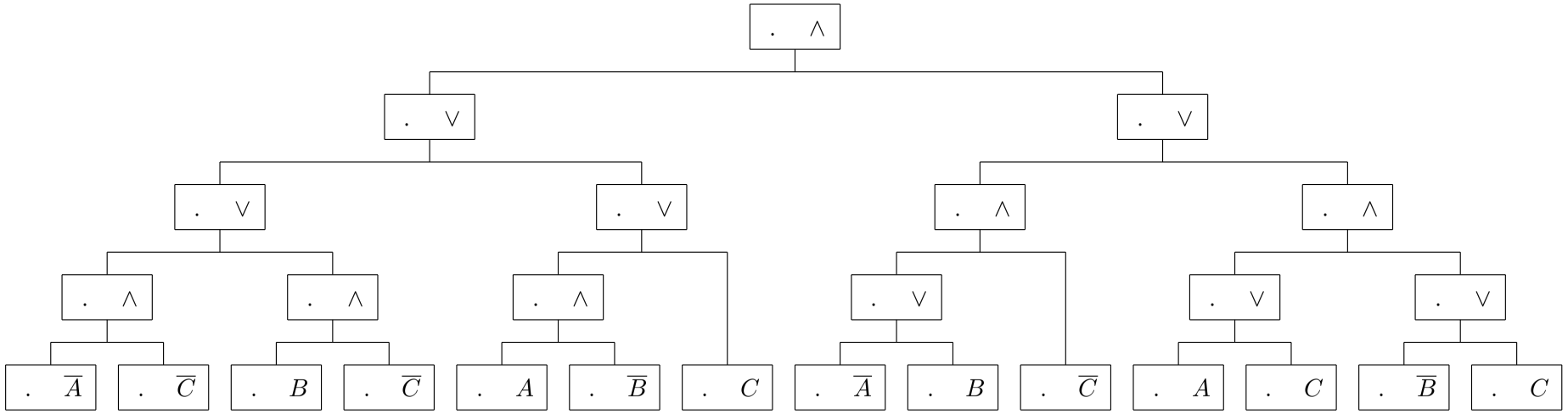

$(((\overline{A}\wedge\overline{C})\vee(B\wedge\overline{C}))\vee((A\wedge\overline{B})\vee C))\wedge(((\overline{A}\vee B)\wedge\overline{C})\vee((A\vee C)\wedge(\overline{B}\vee C)))$